Aaryan Kushawaha
Sec :- “A”

Expression From the K – Map :-

W = A + BC + BD

X = B’C + B’D + BC’D’

Y = CD + C’D’

Z = D’
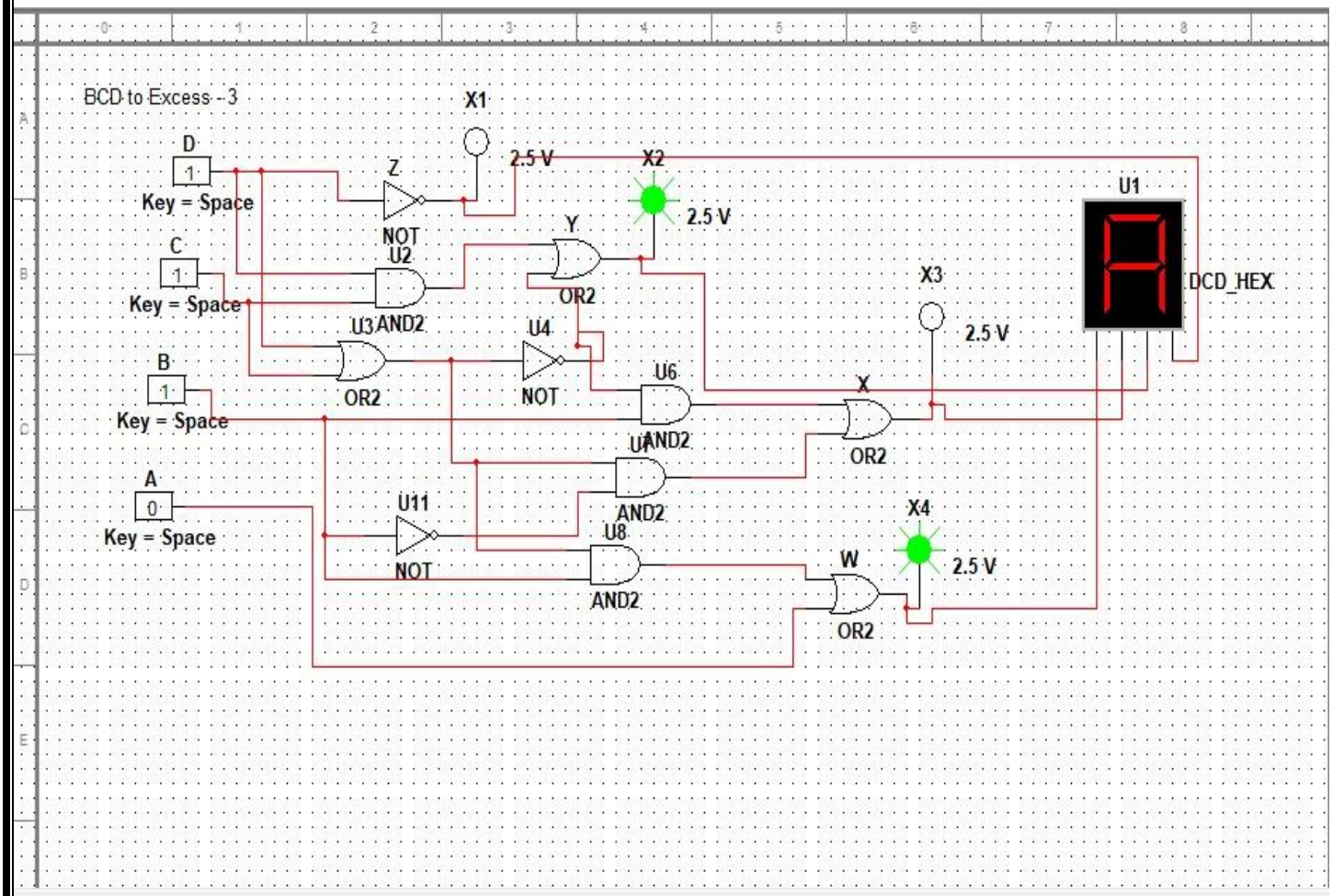
:- Logical Diagram for Input in BCD & Output in Excess -3